Group Design and Integration Project Technical Group Report

Application: Test-Tube Handling

Group 5I

Logan Smith (22020998)

Benjamin Short (22074628)

Akbar Junaedi (20020594)

Jonny Southgate (23013893)

Omar Yakoub (23001690)

University of the West of England

UFMFV8-15-3

2025 – 2026 Academic Year

Word Count – 7,964

Table of Contents

1. *Table of Contents*

2. *Project Management*
   - 2.1. Risk Assessment & Awareness
   - 2.2. Testing Deviations and Incident Review
   - 2.3. Task Allocation Breakdown
   - 2.4. Project Planning and Scheduling
   - 2.5. Progress Monitoring and Coordination

3. *Requirements Analysis*
   - 3.1. Scope & Purpose
   - 3.2. Identification of Stakeholders
   - 3.3. Capture and Analysis of Stakeholder Needs
   - 3.4. Stakeholder Needs to Requirements, System Requirements and Subsystem Requirements

4. *Design & Implementation*
   - 4.1. Top-Level System Design
   - 4.2. High-Level System Design
   - 4.3. Low-Level Design and Implementation of Subsystems
     - 4.3.1. Electrical
     - 4.3.2. Mechanical

5. *Reflection and Evaluation*
   - 5.1. Project Reflection
   - 5.2. Overall Evaluation

6. *References Cited*

7. *Additional Links*

8. *Bibliography*

Project Management

Risk Assessment & Awareness

To ensure the safe development of a test-tube pick-and-place robotic arm prototype, a comprehensive risk assessment was conducted before, during, and after our project's development. This safety procedure ensures that all personnel remain aware of the potential associated hazards with operating or working near the Lynx Motion Robotic Arm. Carrying out such assessments is also a legal requirement under *The Management of Health and Safety at Work Regulations of 1999 (SI 1999/3242), Regulation 3*, which states that "employers must undertake a suitable and sufficient evaluation of any risks to the health and safety of employees and others who may be affected by their activities". Regulations like this form the foundation of modern engineering safety practices and are upheld across both industry and academia.

UWE Bristol University of the West of England

GENERAL RISK ASSESSMENT FORM

Ref: N/A

Describe the activity being assessed:	**Assessed by:**	**Endorsed by:**
Remote controlled operation and set-up of the Lynx motion Robotic Arm for test tube pick-n-place movement with the University of West of England, UFMFX8-30-3 class, in Z Block.	Logan Smith - 22020998	Dr. Carlos Insurable (Module Leader)
Who might be harmed: Group I5 Students, Lecturers, UWE SENG Technicians **How many exposed to risk:** 5-10	**Date of Assessment:** 09/10/2025	**Review date:** 09/10/2026

Hazards Identified *(state the potential harm)*	**Existing Control Measures**	**S**	**L**	**Risk Level**	**Additional Control Measures**	**S**	**L**	**Risk Level**	**By whom and by when**	**Date completed**
Exposed Wiring/Circuitry **Hazard:** Electrical Shock, Fire & Potential Carcinogenic Fume Inhalation	• Most if not all, wiring is heat shrinked • Microcontroller is low voltage (5V) • Supervised during operation • Supervisors have high level of electrical competence • Group I5 has above average level of electrical competence • Arm is controlled from a distance with little need for interaction within range	2	2	4	• New users are given briefing & demonstration before operation • Device is inspected before every operation • Emergency stop switch is accessible during testing • Replace any damaged wiring or connectors when found immediately	2	1	2	Group 5 Safety Officer (Logan Smith), Before, During & After Operation	Ongoing
Rapid Robotic Arm Movement: Physical Impact, Pinch Points	• Supervised by staff during operation • Supervisors have high level of electro-mechanical competence • Group I5 has above average level of electro-mechanical competence • Arm is controlled from a distance with little need for interaction within range	2	3	6	• Robotic arm is powered off during close interactions • Safe operating zones are indicated before testing (maximum robotic arm reach) • Power plug is accessible • Set slow movement speeds during testing	2	1	2	Group 5 Safety Officer (Logan Smith), Before, During & After Operation	Ongoing
Power Supply (Battery) Failure: Chemical Burns, Carcinogenic Inhalation	• Arm is controlled from a distance with little need for interaction within range • Batteryr is enclosed within a housing • Only approved battery types are used	3	2	6	• Battery is inspected before each use to ensure it is not only charged but safe to use • Store and charge batteries in a safe location • Never charge unattended or near flammable materials • Keep fire extinguisher nearby (z-block)	3	1	3	Group 5 Safety Officer (Logan Smith), Before, During & After Operation	Ongoing

(Figure 1: Risk Assessment Part A)

Following UWE's general risk assessment guidelines (University of the West of England, 2024), we have analyzed the potential hazards associated with the operation and setup of the Lynx Motion Robotic Arm, as shown in *Figure 1*. This section of the assessment focuses on the

primary technical risks, including exposed wiring, rapid robotic arm movement, and potential power supply failures. Each hazard was evaluated using the severity and likelihood (S&L) matrix (Fig. 3) to determine the overall risk before and after the implementation of mitigation techniques. The applied control measures such as user briefings, supervision, safety zone awareness, and regular inspections will effectively reduce the identified risks to a ”tolerable” or ”negligible” level.

Power Supply (Outlet) Miss Use: Mains Voltage Electrocution, Fire & Potential Carcinogenic Fume Inhalation	• Sockets are fused and meet UK regulations for sockets • Medical Trained Staff in Z-Block • Staff and students trained in electrical safety	4	2	8	• Only use inspected/tested equipment and extension leads • Do not daisy chain extension cords • Disconnect power when not in use	4	1	4	Group 5 Safety Officer (Logan Smith), Before, During & After Operation	Ongoing
Broken Glass (Test-Tube Movement Failure): Potential Cut Risk, Amplified by Rapid Robotic Arm Movement	• Arm is controlled from a distance with little need for interaction within range • Robotic arm is programmed for this task with smooth motions (for finished product) • Robotic arm is tested with dummy test-tube to meet bare minimum strength requirements for finished product	2	3	6	• Keep area clear of bystanders during any operation • Place protective shield or cover between user and robotic arm when stress testing • Reccomended PPE for stress testiing: safety glasses and gloves	2	1	2	Group 5 Safety Officer (Logan Smith), Before, During & After Operation	Ongoing
Trip Hazards (Cables): Slips, Trips, Falls	• Workspace is maintained to a professional standard • Cables are routed safely	2	2	4	• Tape down any loose cables • Do a check of the workspace before and after operation • Keep personal belongings off the operational space	2	1	2	Group 5 Safety Officer (Logan Smith), Before, During & After Operation	Ongoing
Overheating Components: Burnss or fire from overheating parts	• Low voltage circuits generate minimal heat • Components visually inspected before operation	2	2	4	• Allow components to cool between extended operations • Keep operational area cool	2	1	2	Group 5 Safety Officer (Logan Smith), Before, During & After Operation	Ongoing

(Figure 2: Risk Assessment Part B)

In the second half of the assessment (Fig. 2), we expanded our analysis to include secondary and environmental hazards such as potential electrical outlet misuse, test tube breakage, trip hazards, and overheating issues. These risks were evaluated using the same S&L matrix (Fig. 3). The testing results demonstrate that mitigation techniques such as testing electrical equipment, maintaining clear workspaces, advising the use of PPE, and allowing adequate cool down periods between operations further reduce the likelihood of any incident.

Following our risk assessment analysis, the team designated Logan Smith as the Safety Officer, given that electrical safety presented our highest potential hazard. Considering his role as the project’s programmer and electrical systems designer proved he was the most up to date with the electrical aspect of the project. With these measures in place, we can confirm that all operations can be carried out safely and effectively within the scope of our project requirements.

RISK MATRIX: (To generate the risk level).

Very likely 5	5	10	15	20	25
Likely 4	4	8	12	16	20
Possible 3	3	6	9	12	15
Unlikely 2	2	4	6	8	10
Extremely unlikely 1	1	2	3	4	5
Likelihood (L) / Severity (S)	Minor injury – No first aid treatment required 1	Minor injury – Requires First Aid Treatment 2	Injury - requires GP treatment or Hospital attendance 3	Major Injury 4	Fatality 5

ACTION LEVEL: (To identify what action needs to be taken).

POINTS:	RISK LEVEL:	ACTION:
1 – 2	NEGLIGIBLE	No further action is necessary.
3 – 5	TOLERABLE	Where possible, reduce the risk further
6 - 12	MODERATE	Additional control measures are required
15 – 16	HIGH	Immediate action is necessary
20 - 25	INTOLERABLE	Stop the activity/ do not start the activity

(Figure 3: Severity & Likelihood Matrix, AKA Risk Matrix)

Testing Deviations and Incident Review

To demonstrate professional integrity and the importance of frequent safety monitoring in engineering practice, we can report that an incident occurred during testing in which an identified hazard materialized. A dummy test tube, specified in the risk assessment for early testing, was not used, and a glass test tube was applied. Following an unexpected servo movement, the predicted test tube breakage materialized. No injuries occurred, and a review of the risk assessment took place.

"As the designated Safety Officer, I was directly responsible for enforcing the relevant control measures during testing. This incident highlighted that defined safety roles do not in themselves prevent risk, and that ***consistent procedural discipline*** *is essential regardless of role or familiarity with the system. Following the incident, testing procedures were reviewed and revised to ensure strict adherence to the defined risk control measures." - Logan Smith*

(Figure 4: Broken Real Test Tube)

(Figure 5: Replacement Dummy Test Tube)

Task Allocation Breakdown

When our startup company (Group 5I) was given the provided project brief, one of the first priorities was self-assessing the skillsets amongst our team. This allowed us to aim towards dividing the project evenly and with the highest probability of quality task completion. The following titles resulted from this first meeting:

Name	Project Role / Titles	Background
Logan Smith	Programming & Electrical Design	Robotics Eng.
Benjamin Short	3D Modeling & Printing	Mechanical Eng.
Akbar Junaedi	Research & Business Analysis	Eng. Research
Jonny Southgate	Simulation	Mechanical Eng.
Omar Yakoub	Workflow Planning	Mechanical Eng.

(Figure 6: Project Titles)

We also divided this project paper to give the most accurate information from the project work (assigned work based off our tasks titles) to each section.

Name	Assigned Technical Report Tasks
Logan Smith	❖ *Project Management* ➢ Risk Assessment & Awareness ➢ Testing Deviations and Incident Review ➢ Task Allocation ➢ Project Planning and Scheduling ➢ Project Updates and Coordination ❖ *Design & Implementation* ➢ High-Level Systems Design ❖ *References* ❖ *Additional Links*
Benjamin Short	❖ *Verification & Validation* ❖ *References*
Akbar Junaedi	❖ *Requirements Analysis* ➢ *Scope & Purpose* ➢ *Identification of Stakeholders* ➢ *Capture and Analysis of Stakeholders* ➢ *Stakeholder Needs* ❖ *Design & Implementation* ➢ High-Level System Design ❖ *References*

	❖ *Bibliography*
Jonny Southgate	❖ *Low-Level Systems Design and Implementation of Subsystems* ➢ *Mechanical*
Omar Yakoub	❖ *Top-Level System Design*

(Figure 7: Technical Report Division of Labor to Second Heading Level)

Project Planning and Scheduling

To give an overall timeline for the project, a Gantt Chart was created by Omar Yakoub (Fig.8). Separating tasks, who are responsible for their completion, a completion percentage bar for the assignee to update, and a visual representation of the timeline with key objectives. While the Gantt Chart itself was slightly behind schedule, we view this as a minor setback for the overall project and when created, proved useful for the team to remain goal oriented in a timely manner.

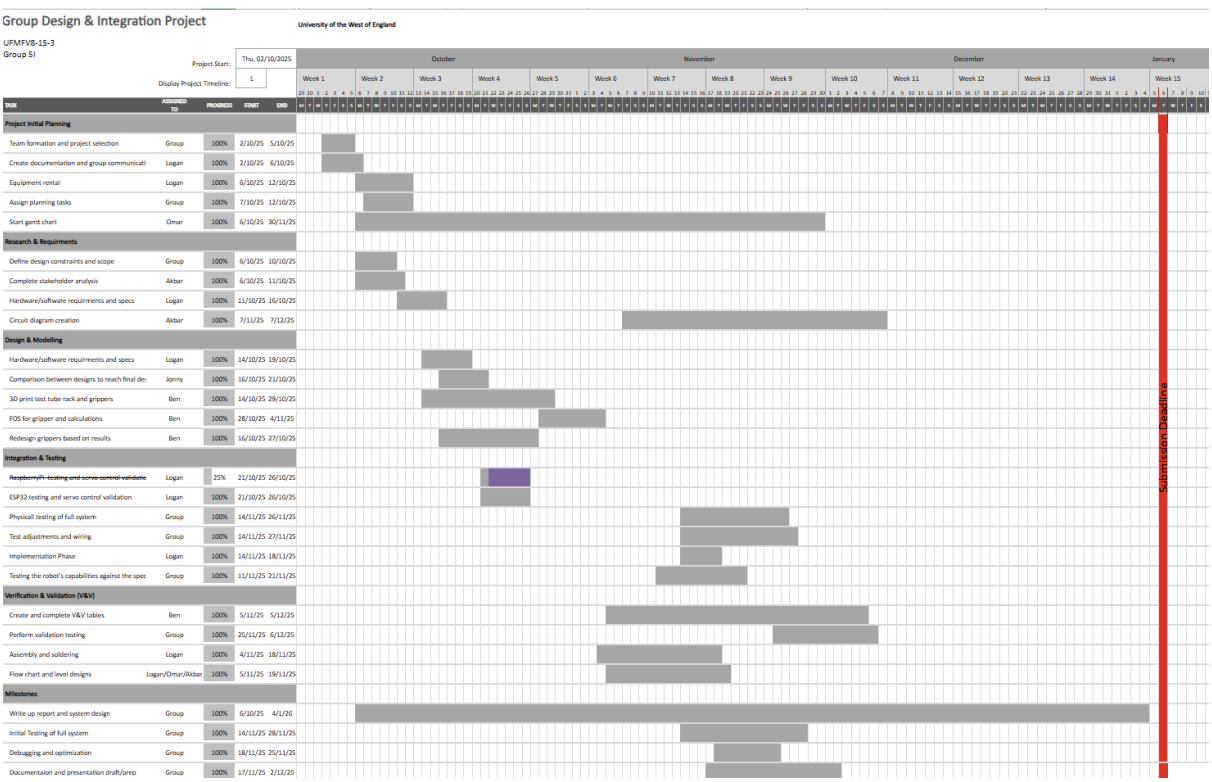

(Figure 8: Gantt Chart)

Progress Monitoring and Coordination

Progress was monitored through regular team meetings, with records maintained to track decisions and actions. Day-to-day coordination was supported by instant messaging (Figure 9), while document management and version control were handled through a shared Microsoft Teams workspace (Figure 10). Together, these mechanisms enabled timely communication, accountability, and controlled document updates throughout the project lifecycle. This approach was effective for coordination, but reliance on informal messaging occasionally delayed formal documentation updates, highlighting the need for clearer decision-logging in future projects.

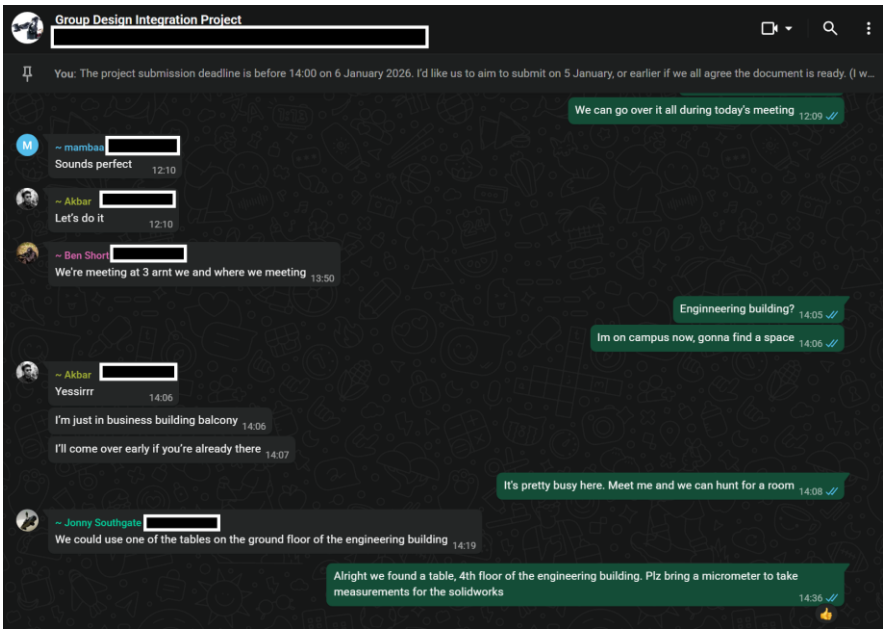

(Figure 9: Group 5I WhatsApp Group Chat)

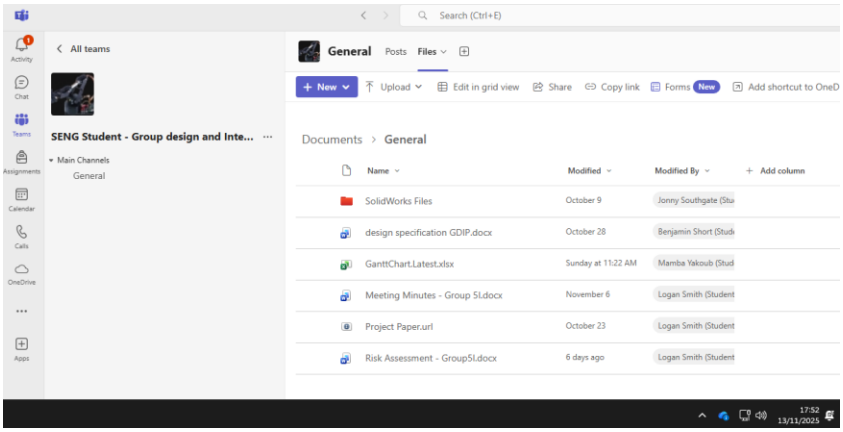

(Figure 10: Microsoft Teams File Sharing for Group 5I)

Requirements Analysis

Our requirements analysis defines who the stakeholders are for the lab test-tube handling robot arm and explains how their goals translate into concrete, testable requirements and success criteria. It clarifies the project's intended value: safe, repeatable transfer of sealed test tubes between fixed racks on any surface, while explicitly linking stakeholder goals to design choices, acceptance tests, and safety controls. In practice, this means capturing what each stakeholder aims to achieve and turning those aims into measurable requirements, and planning verification that proves we meet them. The section also anchors our safety approach to recognized frameworks (for example, COSHH), so that our controls and evidence align with accepted practice for lab environments.

Identification of Stakeholders

Primary Users:

- Lab technicians
- Lab operators
- Researchers
- Maintenance Engineers & Support Engineers

Lab technicians and operators want a tool that reduces repetitive handling and errors while being quick to teach and easy to supervise (clear Ready, Busy, Fault states). Researchers need gentle, consistent placement to protect sample integrity and repeatability across runs. Maintenance and support engineers want straightforward service: fast access to wear parts, simple diagnostics, and minimal downtime. These user aims point us toward a short, guided teach workflow, visible status signaling, compliant and grippy end-effector surfaces, and modular assemblies that can be swapped without removing the arm from the bench.

Market Consumers:

- Private or Public Consumers
- Medical companies
- Pharmaceutical companies
- Universities

Medical companies, pharmaceutical companies, and universities are motivated by operational efficiency, quality, and compliance. They need a solution that fits standard racks and common tube sizes, improves repeatability, and demonstrates sensible safety without demanding extensive integration or changes to existing standard procedures. For them, good looks like reliable placement, short onboarding for new staff and students, and credible evidence to support internal approval.

Health & Safety Regulators:

For this prototype we are not seeking formal certification, but we will align our safety approach with the intent of widely used frameworks, so our controls and evidence match accepted

practice in labs. For this prototype, formal certification is out of scope; however, hazard identification and controls were applied in line with COSHH-style risk management expectations for laboratory environments. Across these, expectations are consistent: identify hazards, communicate risks to users, and keep records for audit. For our robot, this maps directly to a hardware emergency stop, limits to prevent over-reach, and event logging for faults and stops, supported by brief verification tests (for example, emergency-stop response timing). This approach is compatible with general machinery risk-reduction principles (hazard identification, risk estimation, and risk reduction by design) and provides a clear path to deepen controls later if scope expands.

Project Sponsors:
Sponsors require evidence of feasibility, safety posture, and a credible development path supported by verification results.

Capture and Analysis of Stakeholder Needs
We will systematically gather what each stakeholder is trying to achieve and turn that into clear, testable requirements that drive design and acceptance tests. The capture process combines short interviews (operators, researchers, maintenance, etc.), observation and shadowing of current handling tasks. Each finding is recorded as a stakeholder need in plain language, then analyzed and rewritten as a measurable requirement using an acceptance criterion, and a planned verification method (test, inspection, analysis, or demonstration). This aligns with established requirements and systems engineering practice and keeps us consistent.

"Company" Activities

- **Elicit needs.** Short interviews and bench observations focusing on task goals, pain points (repetitive handling, errors, downtime), safety expectations (emergency stop, safe speeds, soft limits), and service constraints (access, spares).

- **Model the context of use.** Describe the environment (indoor, dry, bench-top), objects (sealed tubes, standard racks), and interactions (teach and teleoperation, status signaling) so requirements reflect real work and constraints.

- **Analyze and structure.** Group needs by stakeholders (operators, consumers, auditors, maintenance, suppliers and manufacturers, sponsors). Resolve duplicates, clarify conflicts (for example, fastest possible cycle time versus safe teaching speeds), and record assumptions where information is incomplete (sealed tubes only; no integration in minimum viable product).

- **Prioritize.** Use a transparent scheme (Must, Should, Could) to focus the minimum viable product on essentials: safe transport of sealed tubes

between two racks with teach and teleoperation and clear signaling.

- **Specify requirements.** Rewrite needs into testable shall statements with objective criteria (for example, teach time, placement accuracy, mis-grip rate, status states, emergency-stop response, logging, service times), and link each to a verification method and the evidence to be collected.

- **Trace and maintain.** Build a requirements traceability matrix mapping Need to Requirement to Verification and Test to Evidence; store interview notes, decisions, and test results under version control so changes are auditable.

- **Risk-inform the design.** Run a lightweight hazard analysis (task-based review and/or FMEA) to check that controls (emergency stop, speed limits, soft limits, logging) are implemented and testable at minimum viable product stage; feed high-risk items back into requirements and test plans.

The captured needs drive Stakeholder needs: success criteria (what good looks like), Stakeholder-driven requirements, Assumptions and out of scope (what we are not building now), and Translation to system and subsystem requirements (allocating each requirement to the arm, gripper, controller, etc.). Using traceability from the start ensures each design choice and acceptance test can be tracked back to a stakeholder's goal.

Assumptions & Out of Scope

The purpose of defining out-of-scope aspects of the project is to set hard boundaries for the minimum viable product, so requirements, tests, and safety controls remain focused and feasible. Anything outside these assumptions is explicitly excluded from design and verification at this stage.

- **Biology and Sample handling**
  - **Assumptions:** All tubes are sealed. The robot only transports tubes between fixed racks; it does not open, dispense, sterilize, clean, heat or cool, de-cap or re-cap, or perform contamination control. Users wear standard lab personal protective equipment and follow local chemical and biological safety procedures.
  - **Implications:** Design choices (gripper pads, approach heights, cycle time) emphasize gentle, repeatable handling. Risk controls target mechanical movement hazards (gentle handling, don’t crush).
  - **Out of Scope:** Any function that changes sample processing (sample movement only).

- **Integration with Other Research Hardware**

- **Assumptions:** The minimum viable product operates stand-alone: teach and teleoperation only, moving from a source rack to a destination rack. No data exchange or mechanical hand-offs with incubators, centrifuges, barcode or laboratory information systems, or conveyors.
- **Implications:** The user interface, logging, and fixtures are sized for a single bench cell. Verification focuses on placement accuracy, speed limits, and stops within one cell.
- **Out of scope:** interlocks with third-party equipment, or automated scheduling.

❖ **Position & Autonomy**

- **Assumptions:** The robot base and rack locations are fixed during use. Waypoints are manually taught. There is no AI planning or autonomous sequencing beyond executing taught routines.
- **Implications:** Requirements cover safe teaching steps, soft limits, and repeatable placements within a defined working envelope.
- **Out of Scope:** Dynamic path planning (no obstacles interfering with path), multi-rack search.

❖ **Performance Environment**

- **Assumptions:** Indoor, dry, bench-top operation within the specified payload and reach. Power: 5 Volts. Enclosure protects electronics from incidental splashes and dust; cables are strain relieved.
- **Implications:** Tests address cycle stability, accuracy, mis-grip rate, emergency-stop response, and speed limits under typical lab conditions.
- **Out of Scope:** High-humidity or corrosive atmospheres, cleanroom certification, extreme temperatures, or mobile carts.

Stakeholder Needs - Success Criteria

❖ **Operators (Technicians/Researchers)**

- **Needs:** Fast setup, predictable handling, and clear feedback.
- **Success Criteria:** A novice teaches a pick-and-place routine at appropriate timing. placement accuracy in rack pockets.

❖ **Consumers (Medical, Pharma, Universities)**

- **Needs:** Fit-for-purpose performance with low training/ownership cost and smooth adoption.
- **Success Criteria:** Works with common tube sizes and standard rack spacing, able for first-time use without supervision; basic evidence (accuracy, throughput, safety checks)

- **Health & Safety Auditors (Regulatory expectations)**
  - **Need:** Demonstrable hazard controls and verifiable operation within safe limits.
  - **Success Criteria:** Hardware E-stop halts motion with recorded target time, fault and E-stop events timestamped and retrievable.

- **Maintenance Engineers (Support/Service)**
  - **Need:** Quick diagnosis and simple part replacement.
  - **Success Criteria:** Cheap and time efficient replacement parts/ swap parts

Stakeholder Driven Requirements*:*

- **Operators**
  The system shall provide a teaching mode to record at least two waypoints (pick and place) with adjustable approach heights, and a novice user shall be able to complete a basic routine in a short, supervised bench trial without specialist training.

- **Consumers**
  The gripper shall handle sealed tubes across a standard laboratory size range and shall place into commonly used racks without mechanical reconfiguration between typical use cases. The system shall maintain a steady, repeatable cycle time during a continuous demonstration of routine bench work, without operator intervention beyond loading and unloading racks.

- **Health & Safety Auditors**
  The system shall provide an emergency means of halting motion and removing actuator power during operation. For the prototype, this requirement is satisfied through manual emergency power isolation, with provision for a dedicated latching emergency-stop device identified as a future upgrade.

- **Maintenance Engineers**
  The end-effector shall be modular and replaceable using minimal tools in a short service window, using a simple fastener like a screw. On power-up, the system shall execute a brief self-test that exercises key inputs and outputs and presents readable fault codes without external equipment. The design shall provide clear access to wear items such as pads and strain reliefs without removing the arm from the bench, and common fault recovery steps shall be executable at the bench using basic hand tools.

<u>Stakeholder Needs to Requirements, System Requirements and Subsystem Requirements</u>

Purpose and Methodology
We translate plain-language needs into testable requirements at three levels with clear ownership and verification. We start with the need (what stakeholders want), translate it into a Stakeholder Requirement in measurable terms, derive the corresponding System Requirement that the whole robot must satisfy, and then allocate Subsystem Requirements to the elements that implement it (arm and mechanics; end-effector and gripper etc. etc.)

Engagement plan & Evidence
We will collect clear proof that the robot meets stakeholder needs and link every piece of evidence to a unique requirement identifier. We will engage operators and researchers at the bench to observe and time how long it takes a first-time user to teach a routine, note any errors, and record steps. We will meet maintenance and support engineers to run, read and interpret fault codes, and time the replacement of the end-effector and common wear items. We will work with health and safety representatives to measure emergency-stop response time and demonstrate that soft travel limits prevent over-reach at all taught positions. We will meet consumers to demonstrate compatibility with common tube sizes and standard rack spacing, and to show a steady cycle time during a short, witnessed run. We will meet sponsors to review progress against clearly defined gates, show what has been proven, and agree with any remaining actions.

For each activity, we will collect the raw information and the processed results. Raw information includes photographs, videos, and machine logs with dates. Processed results include a short-written summary for each test and a simple chart of placement accuracy and errors.

Possible evidence we can collect will include:

1. **Usability evidence:** the measured time for a novice to teach a routine and a short narrative summary of user feedback.
2. **Performance evidence:** a placement accuracy chart, a cycle-time chart, and a simple table of mis-grips or drops.
3. **Safety evidence:** a capture of the emergency stop timing, a short note confirming that speed limits in teaching and jogging were enforced, and a log that shows soft travel limit events at all taught positions.
4. **Reliability snapshot:** a brief endurance run with observations of stability and temperature.
5. **Serviceability evidence:** the self-test record, the list of fault codes with their meanings, and the timed replacement steps for the end-effector and wear items.
6. **Controlled documents:** a quick-start guide of no more than two pages, a maintenance checklist, and a small spares list.
7. **Traceability extract:** a one-page view from the requirements traceability matrix that shows the link from the stakeholder need to the requirement, to the test, and to the stored evidence.

Stakeholder Review
Following a stakeholder review with our module leaders, we are incorporating three concrete needs into the design.

First, Easier control and teachability: the robot will provide a short, step-by-step teaching workflow on an onboard interface, guided prompts so a novice can record pick and place points without a host computer.

Second, power independence from the host: to address the concern that the robot dies when the hosted computer turns off, the controller and motion stack will run locally on the ESP32 with its own regulated supply.

Third, diagnostics and clear machine state: we will replace the manual status sign with an LCD that presents live Robot Mode (Ready, Teach, Busy, Fault), and basic diagnostics (for example, controller link, emergency-stop state, last error). Together, these changes position the prototype as a minimum viable product suitable for investor demonstration; core functionality is proven, user interaction is simplified, and a clear roadmap for regulatory compliance.

Design & Implementation

Top-Level System Design

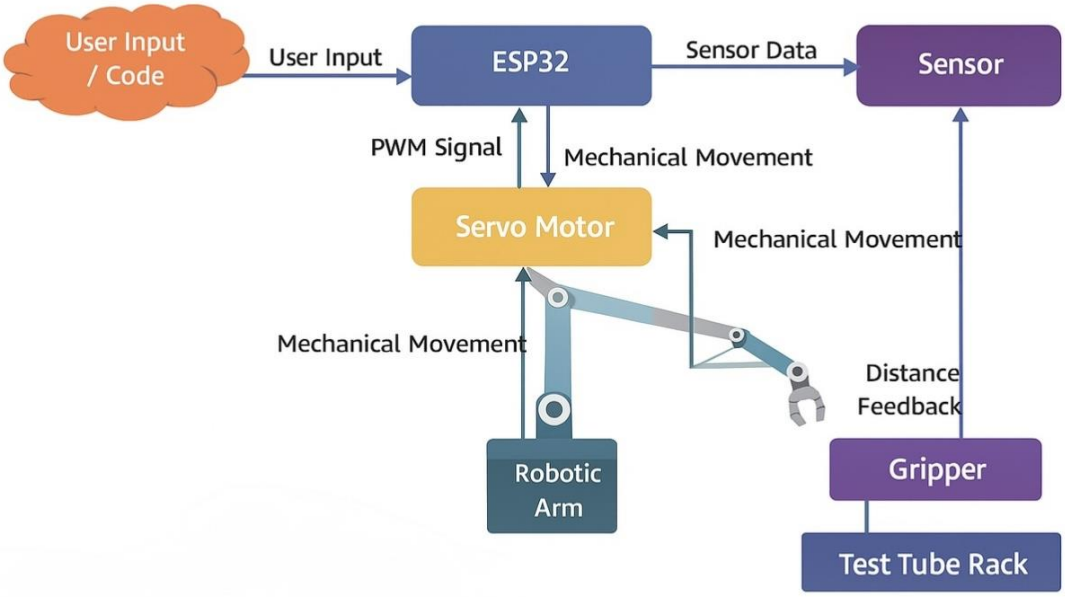

(Figure 11: Top-Level System Design Chart)

A top-level design chart is a visual representation of the entire project system showing its major components, interactions, and flow of critical data. As shown here in Figure 1 , the chart

illustrates the functional flow throughout the components of the robotic arm and it is designed to meet the core requirements of the lab equipment handling. The system consists of the following:

- **User Input/Code:**
  The software logic that the team wrote to start and manage robotic operations. Based on sensor feedback and preprogrammed instructions, it produces control signals (PWM).

- **ESP32:**
  The ESP32 acts as the system's brain, receiving inputs from the software, processing sensor data such as proximity, distance feedback, and signals that drive the actuators (primarily the servo motors).

- **Gripper Control/Distance feedback:**
  This includes sensors and actuators that control the gripping mechanism. It makes sure that the robotic arm can grip, hold, and release the test tubes while maintaining the minimum lifting height.

- **Robotic arm:**
  The arm uses the servo motion to physically move the gripper, providing the necessary reach and flexibility to move the test tubes from one point to the other.

The implemented system satisfies all functional constraints defined in the project brief. Teleoperation is achieved via a Bluetooth-connected user interface, allowing operation from a safe distance. The teaching mode enables non-specialist users to record routines. System states and faults are communicated through visual status indicators, supporting safe and predictable operation.

<u>High-Level System Design</u>

Figure 12 illustrates the high-level control logic or code implemented with our ESP32-based robotic arm. Following system initialization, which configures Bluetooth Low Energy (BLE) communication, non-volatile storage, and status indicators, the firmware operates within a continuous main control loop. At the start of each iteration, a "heartbeat" verifies continued communication with the external user interface, and a timeout condition immediately triggers a safe disarm of the servos, ensuring fail-safe behavior in the event of any connection loss. When the heartbeat is valid, the controller proceeds with different mode dependent tasks, including periodic recording and playback ticks used for teaching/repeating functionality. Motion commands are passed through a smoothing stage to enforce gradual transitions and reduce mechanical stress before actuation. The system status is updated via visual LED indicators, and incoming BLE commands are processed to manage arming, recording, playback, or abort

requests. This parent loop based architecture cleanly separates safety supervision, motion generation, and command handling, providing a deterministic control structure suitable for safe human taught robotic manipulation.

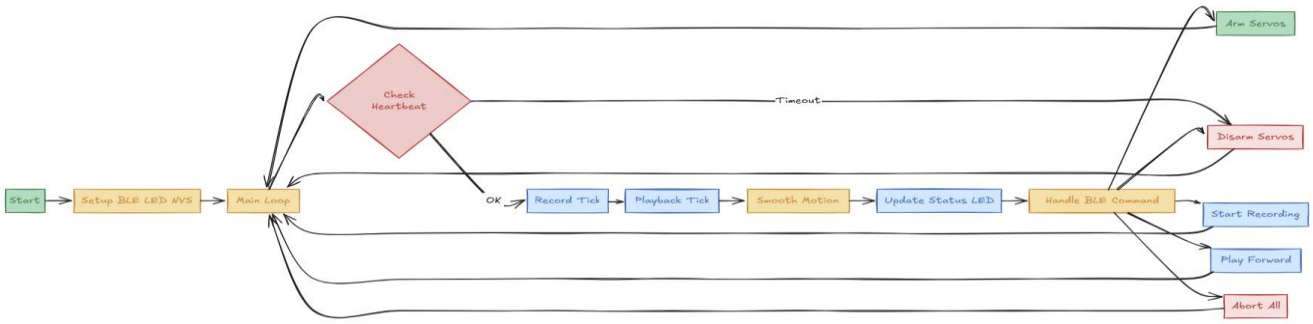

(Figure 12: High-Level Design Chart – Focusing on Software)

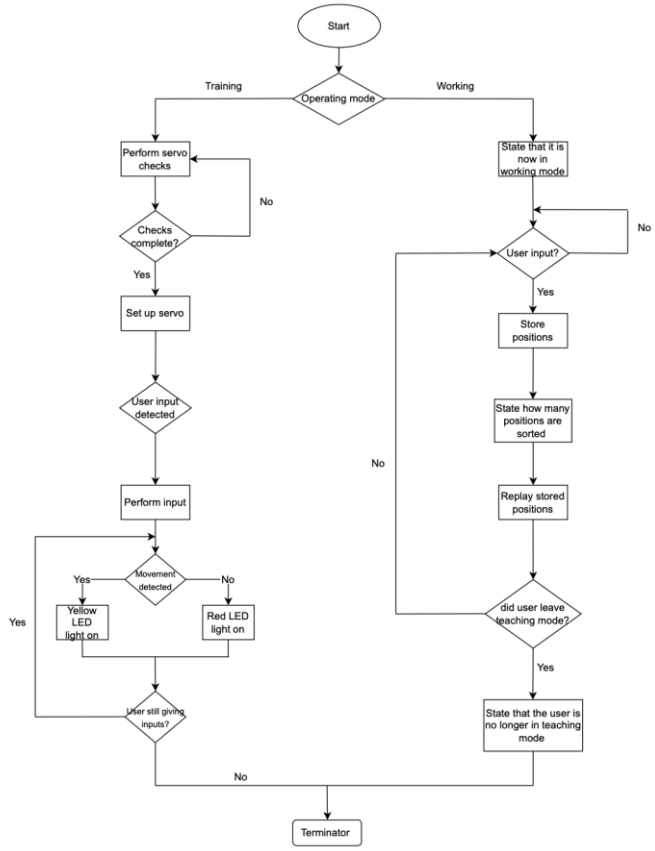

(Figure 13: Early Edition High-Level Design Chart – Focusing on Teaching/Working Modes)

Low-Level Design and Implementation of Subsystems

This low-level design describes the bench prototype as built and wired. An ESP32-S3-DevKitC-1 generates six hobby-servo control signals and shares a single regulated 5 V DC supply with six servos (HiTec HS-422). Operator interaction is provided through a desktop application over Bluetooth (BLE).

This prototype intentionally excludes several hardware safety and usability features (e.g., fuse, bulk capacitance on the servo rail, buzzer). Instead, safety-of-motion is implemented in the software using a state machine, command timeouts, and software limits. These omitted items are captured as planned upgrades for the next schematic revision.

(Figure 14: ESP32 Pinout Map)

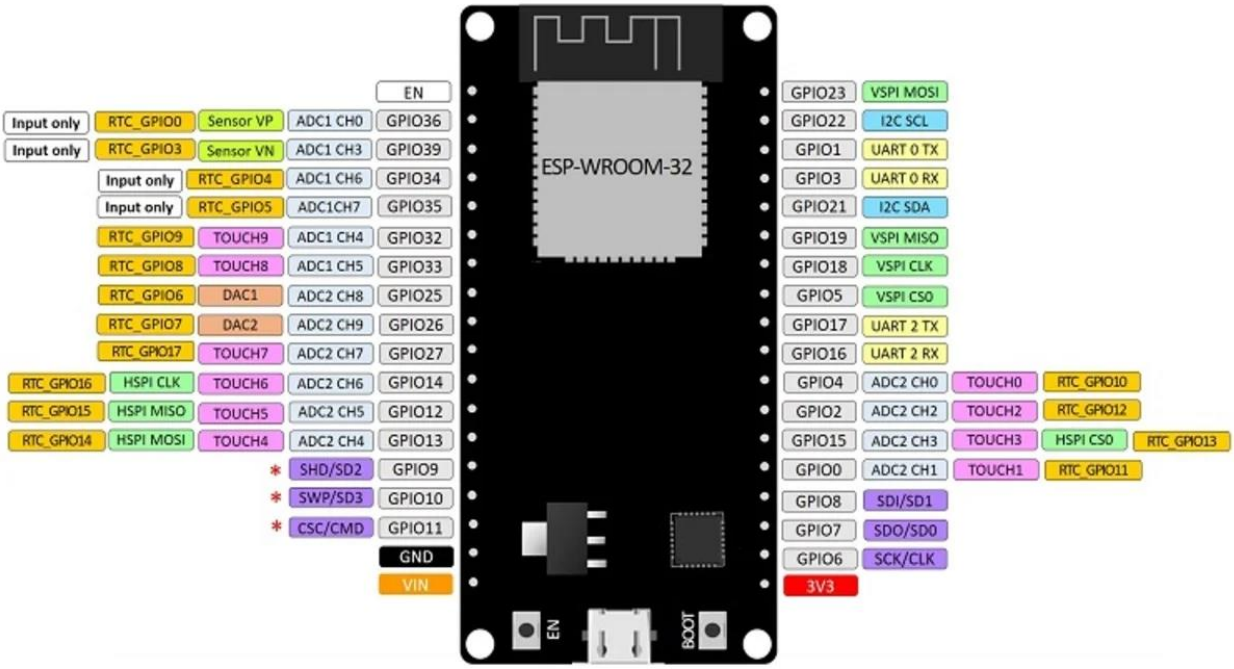

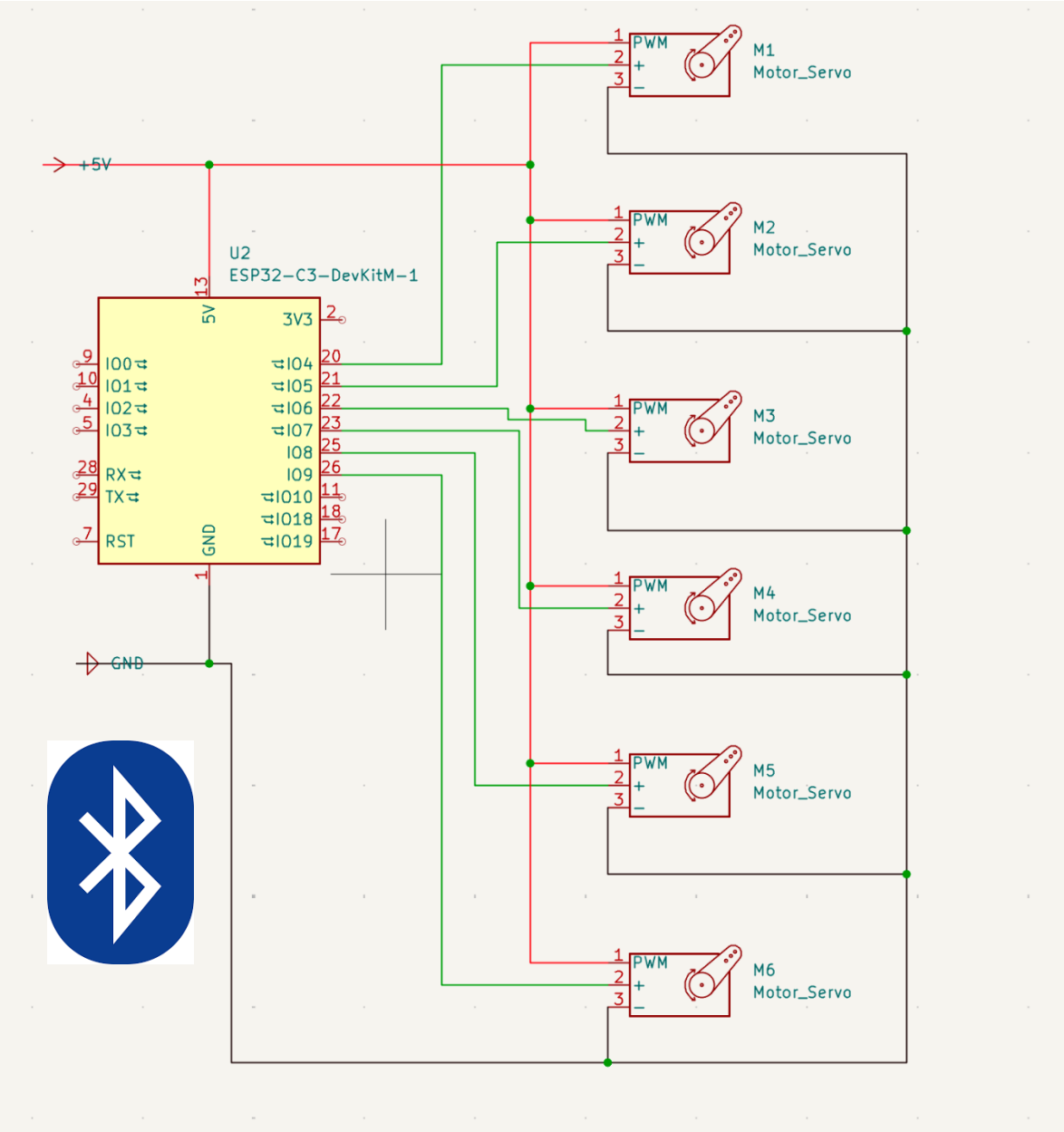

(Figure 15: Working Prototype Electronic Architecture. Made on KiCAD)

Electrical Architecture

The prototype uses a single regulated 5 V DC supply shared between the ESP32-S3 controller and all servo actuators, with a common ground reference. Safety of the arm movement is enforced primarily through software. Hardware protection features such as inline fusing, reverse-polarity protection, bulk capacitance on the servo rail, and a latching emergency-stop devices were intentionally excluded from this revision and are recorded as planned upgrades for future iterations of the system.

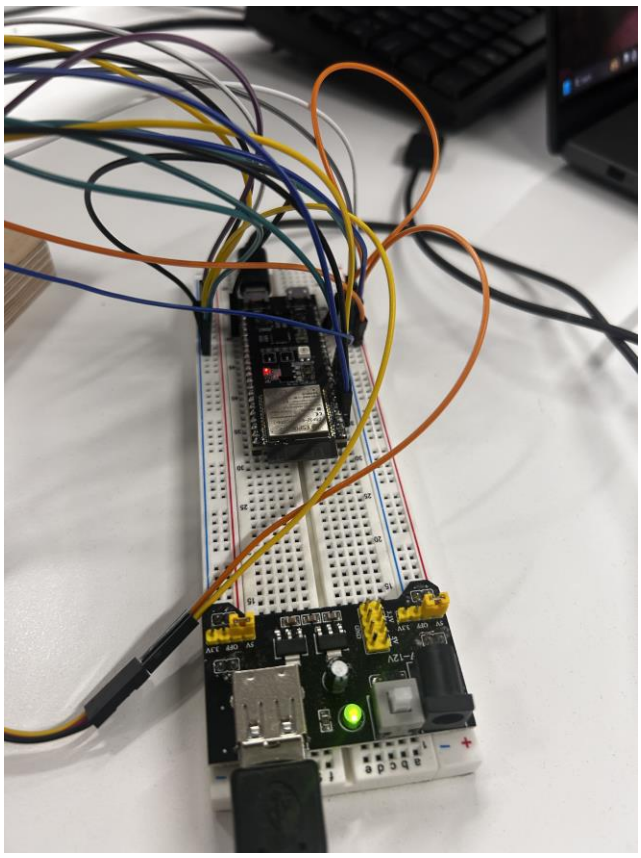

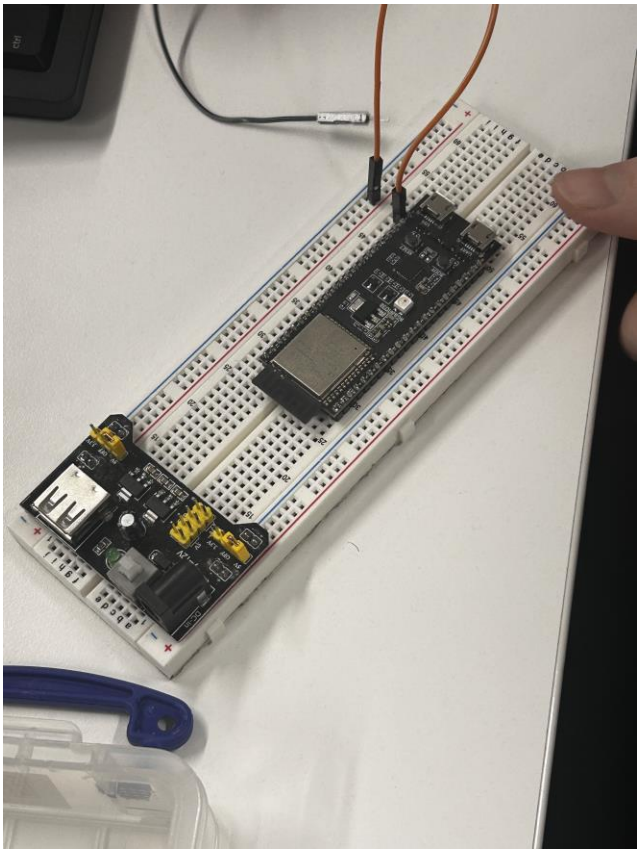

(Figure 16 & 17: Images of Electronic Architecture)

Controller and Logic

Here we generate accurate, low-jitter servo pulses and provide a simple, robust link to the computer app without additional bench hardware.

GPIO Assignment

Dedicate six output-capable GPIOs to the servo signals. Suggested safe candidates on ESP32-S3-DevKitC-1 are mid-range GPIOs such as 9, 10, 11, 12, 13, 14. Keep any spare GPIOs unassigned in this build for future indicators or inputs.

Host Protocol
Bluetooth Low Energy (BLE) Minimum command set: JOG axis, TEACH setpoint, RUN, STOP, STATUS, SAVE. Controller enforces limits and executes motion locally.

Verification
Confirm that six channels operate concurrently without visible jitter. Check pulse frequency and duty on one channel with a scope if available. Exercise jog/teach/run/stop from the app and verify status text mirrors the controller state.

Header and Wiring Scheme for Actuators
Each servo uses a three-pin header with the fixed order: signal, +5 V, ground. Label this order on the drawing and panel to avoid mis-mating. Use consistent crimped leads.

User interface: teach and teleoperation
Provide simple, tactile controls and clear feedback so the operator can teach pick and place positions and run routines confidently.

Control and Status
All interaction is via the computer app. The app provides onscreen jog controls, teach/store for pick, place, and approach heights, a run command, a stop command, and a status banner that reflects Ready, Busy, and Fault states from the controller.

Test and Verification:
Teach two waypoints and an approach height using the app, then execute the routine. Intentionally trigger a stop and simulate a host disconnect to confirm the controller halts and reports a faulted state that requires acknowledgement.

Bill of materials

- ESP32-S3-DevKitC-1
- External 5 V supply sized for servos
- Six three-pin servo headers and mating cables
- Wiring, Labels
- Small Mounting Panel, e.g. Breadboard

Implementation and Test Plan

Records to keep:
Measured rail voltages with and without load, photographs of wiring and connector labelling, short videos of emergency stop tests, a short console log showing controller inputs, and notes of any changes to pin assignments or wiring during bring-up.

Risks, mitigations, and traceability to requirements

- **Loss of wireless input:** implement a short input timeout; if inputs are not updated, stop motion, assert Fault, and require user acknowledgement to resume.
- **Connector mis-mating or wiring errors:** use keyed or locking connectors, consistent pin orders, clear labels.

This prototype delivers multi-axis servo control, teachability, host-link loss handling, and a stop command. Items not present here (physical emergency-stop, physical indicators) are recorded as planned upgrades that align with the stakeholder-driven safety and usability requirements and will be incorporated in the next schematic revision.

Mechanical

We were required to add mechanical components to the robot arm to complete the test-tube handling application. We decided to produce a customised gripper to meet the 50 cm working envelope criterion and a custom test tube rack holder to simulate how the robot would function in a lab.

To begin, we disassembled the robot's head and removed the original grippers. Next, we modelled a 1:1-scale part of one gripper in SolidWorks. By measuring the robot arm's working reach, we calculated that the grippers needed an additional 60 mm of reach to comfortably operate within the 50cm working envelope. Our draft design, shown below, features a tapered body with smooth edges to mitigate the risk of injury from collisions. Once the design was printed on a 3D printer and tested, we found the 28 mm test tube couldn't grip the smooth face and would often slide.

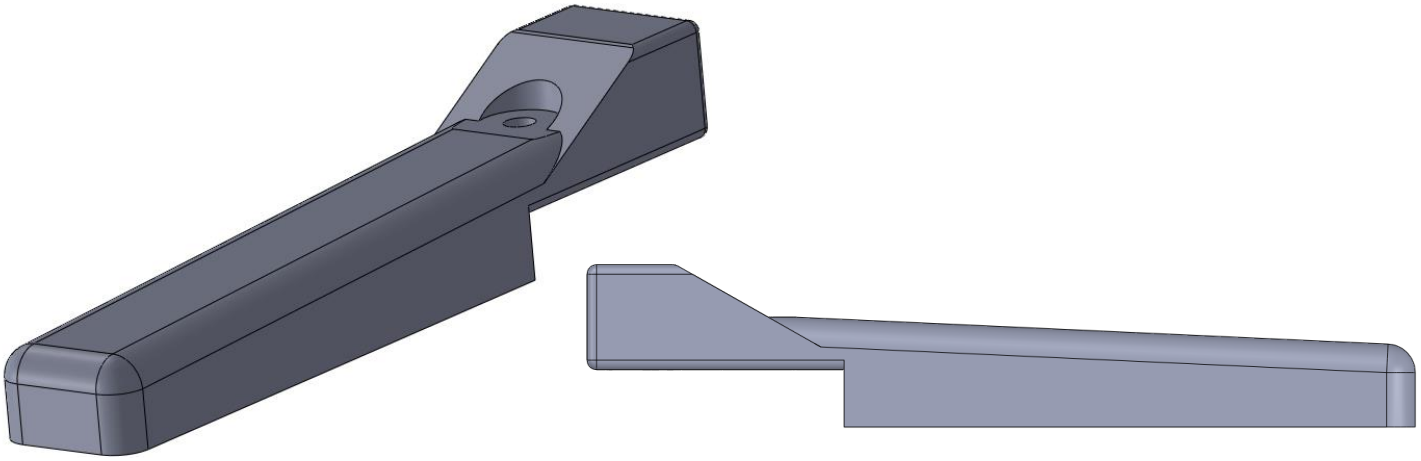

(Figure 18 & 19: Initial Modified Gripper in SolidWorks)

We developed the initial design, adding a cylindrical indent with filleted edges. The indent improved the stability of the test tube, whilst retaining smooth features.

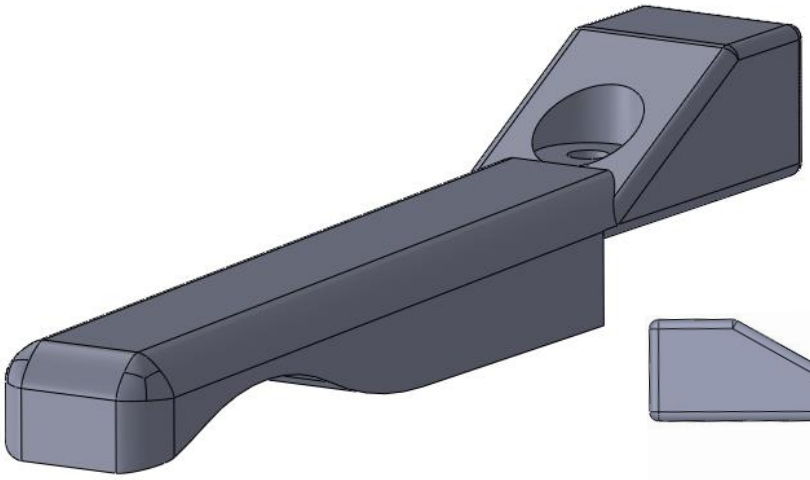

(Figure 20 & 21: Updated Gripper in SolidWorks)

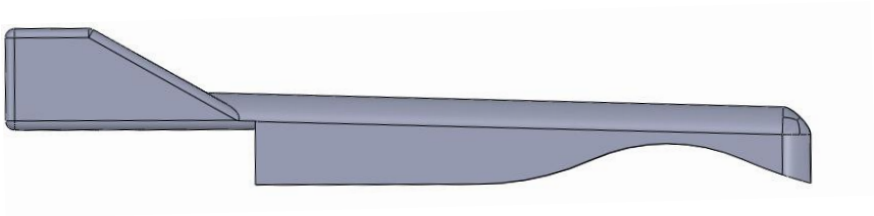

When sending the gripper to the 3D printer, a 100% infill density was implemented to improve the accuracy of the mechanical simulations.

For the test tube and test tube rack, we measured the physical test tube's diameter and length, then produced the tube in SolidWorks. Modelling the test tube is essential, as it enables simulation of stress and deformation on the gripper and the tube. The test tube rack is a five-hole rack design. The rack has filleted edges and pads on the base to avoid tipping.

(Figure 22 & 23: Test-Tube & Test-Tube Holder in SolidWorks)

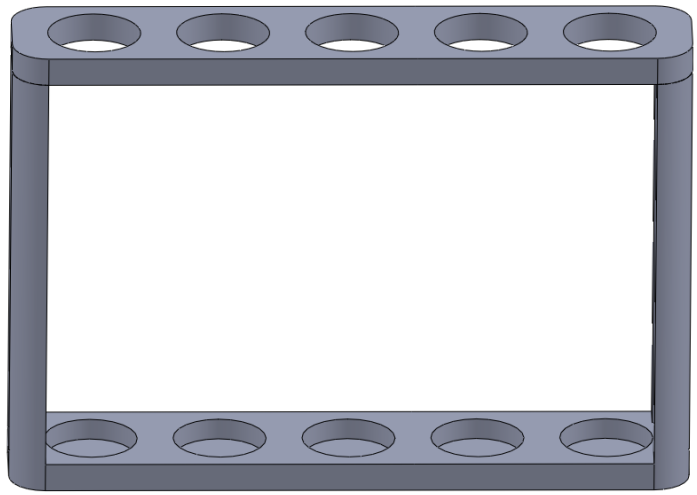

With the grippers, test tube, and rack modelled in SolidWorks, we then tested for stress and flexural ratings. Finite element analysis (FEA) is the process of predicting an object's behaviour based on calculations made to break complex systems into smaller, simpler pieces, or "elements." (Ansys, 2025). For the FEA analysis, we used Ansys, a software package capable of performing complex calculations, to obtain results such as stress and deformation at different points along the geometry. We modelled only the grippers and tube in Ansys, since the rack is stationary throughout the demonstration and experiences only the weight of a test tube, which is negligible compared to the compressive strength of PLA plastic. Once the SolidWorks gripper was imported into ANSYS, the material properties needed to be defined.

The 3D printer used in the project uses standard PLA plastic, which is not provided in the ANSYS materials library, so values for Polylactic Acid were applied to the model based on a research paper on PLA (Shady Farah, 2016), as shown below.

Properties of Outline Row 3: PLA

	A	B	C	D	E
1	Property	Value	Unit		
2	Material Field Variables	Table			
3	Density	1250	kg m^-3		
4	Isotropic Secant Coefficient of Thermal Expansion				
5	Coefficient of Thermal Expansion	0.000135	C^-1		
6	Isotropic Elasticity				
7	Derive from	Young's Modul...			
8	Young's Modulus	3.5E-09	GPa		
9	Poisson's Ratio	0.35			
10	Bulk Modulus	3.8889	Pa		
11	Shear Modulus	1.2963	Pa		
12	Tensile Yield Strength	5.41E+07	Pa		
13	Tensile Ultimate Strength	5.92E+07	Pa		

(Figure 24: PLA properties)

This step is essential, as different materials have different densities and Young's moduli, and incorrect values will skew the theoretical results when the part is used in a real-world scenario.

To model the mesh of the gripper part, we used a patch conforming method consisting of tetrahedra. This method helps remove convergence issues in the model's curves, allowing the mesh to subdivide more efficiently. For element sizes, we used a general body size of 2mm, with larger body sizes near the edges of the cylindrical face to avoid skewness. Skewness is a measure of how close the tetrahedra are to near-perfect shapes. More elements with near-0 skewness indicate a high mesh quality.

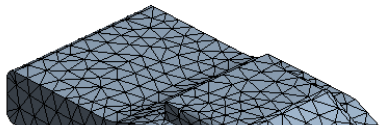

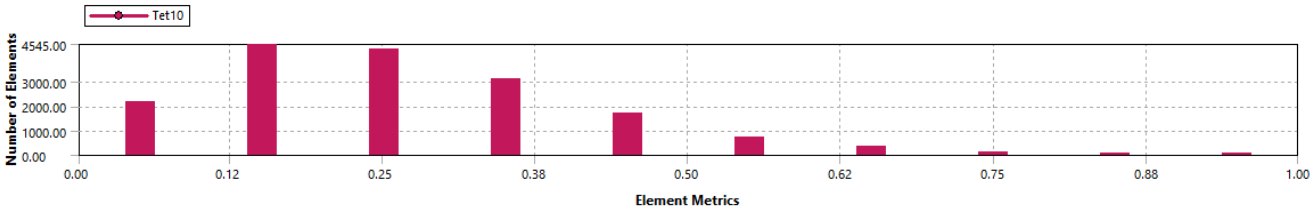

(Figure 25: Gripper Mesh Simulation)

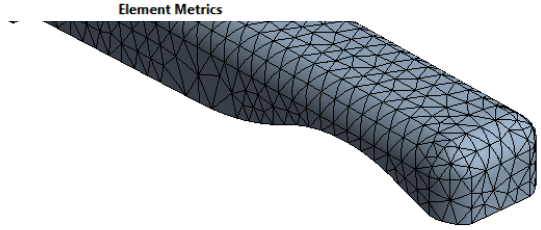

(Figure 26: Skewness Graph)

The smaller the element size, the higher the model's quality. A general element size of 2.0 mm produces a mesh of 27,297 elements. This element number is a good value, as too many elements impede simulation time.

(Figure 27: Test Tube Simulation)

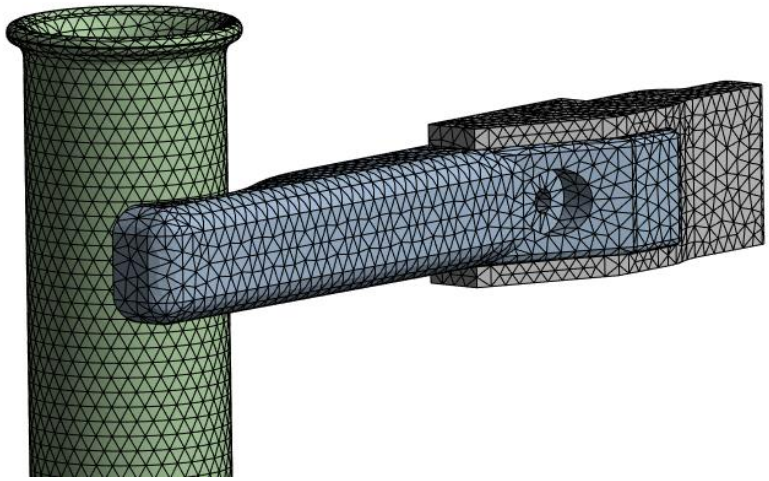

Arm and Mesh

To simulate stress and deformation in the grippers, we calculated the force exerted by the motor on the grippers. Using data about the HS-422 Deluxe servo motor used from the HiTec website (Anon,2025), the motor has a maximum torque range of 3.3~4.1 kg.cm. Using the value 4.1 for our calculations, as this maximises the stress on the gripper part, ensuring the model will not fail under any load from the motor, and converting into Nm gives a torque value of 0.4022.

The force applied to the grippers by the motor as it winds them in uses the equation:

Force = Torque/Wheel Radius. The force the grippers have from the motor is 80.44 N.

With the force defined, we added the loads and supports to the simulation. A cylindrical support is placed on the test tube connected to the cylindrical cutout of the gripper, and a force from the motor is applied to the base of the original gripper, creating a bending moment about the test tube. We did this as we are testing the strength and factor of safety of the gripper part, not the test tube. To confirm whether the gripper will fail before the motor reaches maximum torque, Von Mises Stress (VMS) was used. We used VMS as it is a scalar value with no direction, providing an absolute stress value. VMS accounts for normal stress in the X, Y, and Z directions, as well as shear stress. Shear stress is essential, as PLA, a brittle material, is likely to fail due to its tendency to deform axially and plastically under load.

After running the solution, the equivalent stress and Total deformation heat maps shown below were produced. The test tube was suppressed to improve visual clarity.

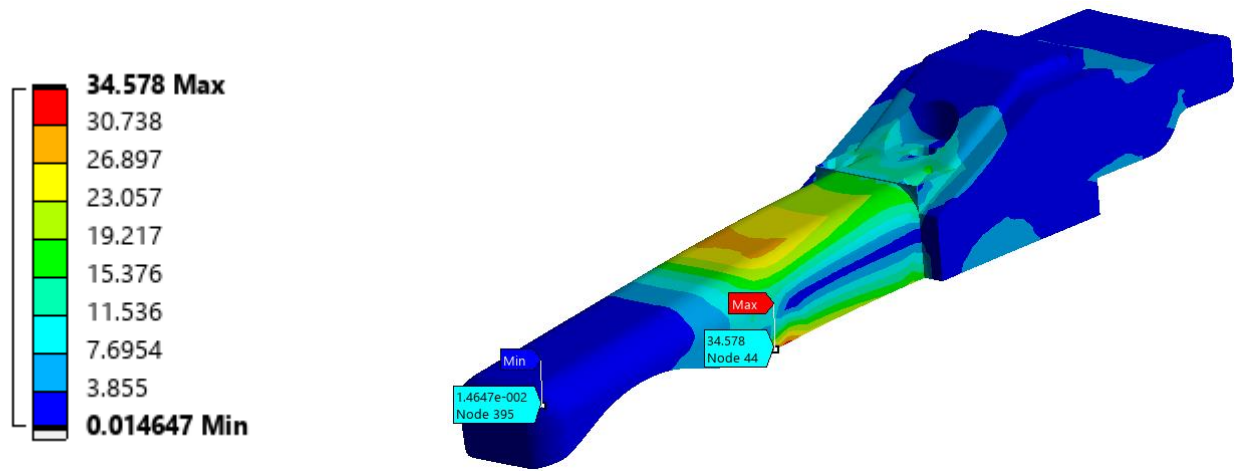

(Figure 28: Stress map in MPa)

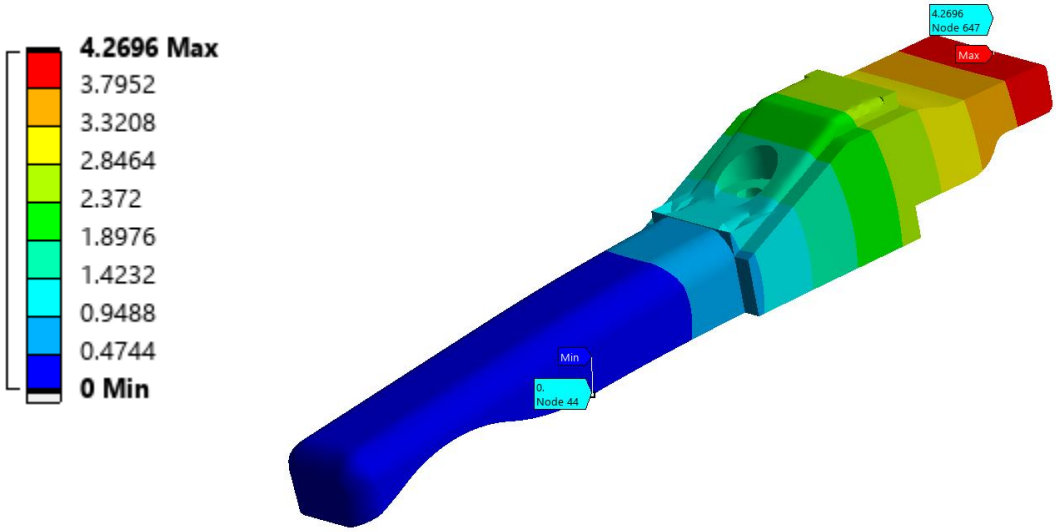

(Figure 29: Deflection map in mm)

Maximum stress occurs at the point of convergence between the gripper's rounded and flat faces. The value of maximum stress recorded was 34.578 MPa. Compared to the maximum tensile strength reported in the research paper (Shady Farah, 2016) of 59 MPa, this provides a factor of safety of 1.71. This factor of safety indicates that the gripper part is stronger than required to withstand the motor's maximum torque.

Maximum deflection occurs at the point where the gripper is attached to the motor, due to the cylindrical support and the forces acting on opposite ends of the gripper. Maximum

deformation was 4.27 mm. As we were measuring the test on only the gripper, the simulation does not account for the motor providing additional support, which shifts the deflection towards the centre of the two supports, lowering the value significantly.

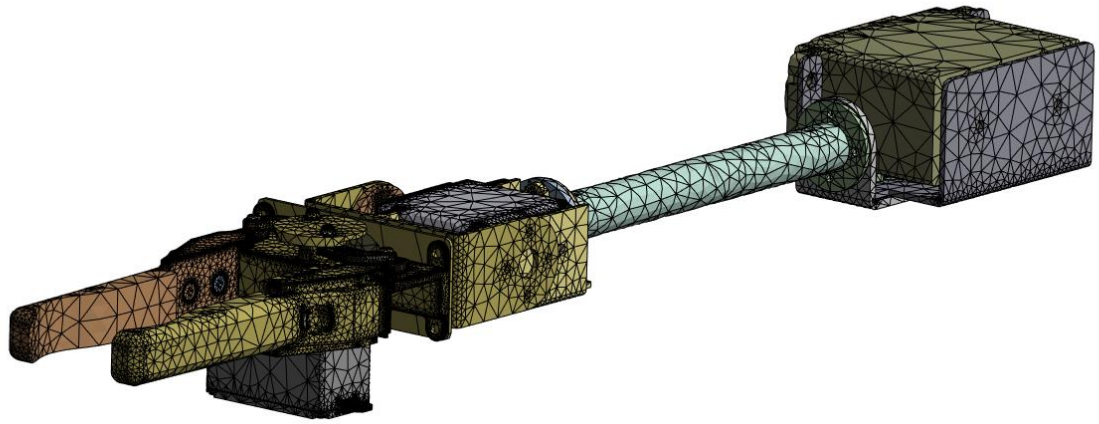

(Figure 30: mesh of robot arm and grippers, with very small stress highlights at the gripper connection point)

For further mechanical analysis, the motor stress in the grippers is localised and will not affect the robot's arm. However, there is a force on the arm from the lifting of objects. To model this, we used data from RobotShop (RobotShop, 2025) for the Lynxmotion AL5D Robot Arm and found that the maximum lift weight with the arm extended is 312 grams, producing a force of 3.06 N. Using a factor of safety of 2, this gives a force of 6.12 N. A CAD model of the robot's main arm was created using elements from the Lynxmotion CAD model library (Eric Nantel, 2024) and the previously shown gripper design. We are focusing on the effects of the gripper, as “Lynxmotion has been producing robots since 2003, and has well received reviews” (Lynxmotion, no date), so assuming the quality of their product meets the stated specifications on their website, the main mechanical testing focuses on the gripper and the test tube. We produced an automated mesh with weak springs. We simulated the arm under a 6.12N load to analyse how stress flows through the arm, with negligible results compared to the aluminium's material properties.

The gripper part and test tube worked without failure when used with the motor provided, with only minor deformation. The factor of safety removes the risk of shearing during demonstrations.

Verification and Validation

This Verification and Validation (V&V) plan describes how the automated test tube handling robotic arm will be evaluated throughout every stage of development. This process ensures

that it meets the design specifications. The plan combines verification and validation methods to provide complete traceability and documentation of the system's reliability, safety, and usability.

1. V&V Across the Design Lifecycle

ID - KEY:	Requirement ID	Requirement	Level of Requirement	Results
P = Physical Requirement **S = Safety Requirement** **E = Electronic Requirement** **SW = Software Requirement**	P1	Working envelope at least 50cm	Necessity	Pass
	S1	User can operate the system from a safe distance	Necessity	Pass
	E1	LEDs to signal status, configuration and errors	Necessity	Pass
	SW1	The user and 'teach' the arm to do the tasks without specialist knowledge	Necessity	Pass
	SW2	The arm operates in a smooth motion to pick up and place the test tube	Preferred	Pass

(Figure 31: Early V&V Requirement Assessment)

Requirement	Description	Method of testing	Evidence	Results
Arm must operate in a 50cm envelope	Extended gripper attachment	Measurement test	Manual measurement	Pass

Arm movement must be accurate and repeatable.	Servo feedback control with the microcontroller ensures precise angle commands.	Servo calibration and repeatability tests.	Consistency tests under repeated motion cycles.	Pass
Gripper must allow smooth release of test tubes.	Gripper must smoothly place test tube	Movement timing verification in control loop.	Five consecutive pick-and-place cycles were executed without grip failure or tube misplacement	Pass
Must allow manual inputs	The product needs to be able to be 'trained' meaning can be manually programed by any user if needed	Python Server Test	User Interface Connects to ESP32	Pass
Final test	The final product shows it fits all requirements (validation)	Physical test	Video of working final product	Pass

(Figure 32: Later Review of V&V Assessment)

2. Verification Methods

Verification is the act of checking the system is correctly designed and implemented by using these techniques:

- **Document and Design Reviews**, compare the specifications to schematics, and CAD models to ensure they are correct.

- **Simulation and Analytical Verification**, use simulation software like ANSYS for checking stress and performing circuit analysis for electronic stability.

- **Code Verification**, continuously do demo runs with the code.
- **Integration Testing**, Confirm the code software and electronics are working together in the desired way repeatedly
- **Traceability Analysis**, Keep a record of all tests and verifications.

3. Validation Methods

Validation ensures the system performs as expected in its real environment by using these methods:

- **Functional Testing**, Evaluate arm performance (reach, accuracy, gripping) against specifications.
- **User Acceptance Testing (UAT)**, in our case, stakeholder review and overall group testing
- **Reliability and Repeatability Testing, c**onduct long-duration operations and repeat motion cycles to test stability and endurance.
- **Environmental Validation** confirms consistent operation under laboratory conditions such as temperature, humidity, and vibration.
- **Safety Validation**, ensure safe operation, prevent gripper damage, and check stop response.

4. Traceability and Coverage

All requirements will be connected to design implementations and are related to V&V activities through the Requirements Traceability Matrix (RTM). Each requirement (mechanical, electronic, software, and testing) has defined methods for V&V to ensure 100% coverage and direct traceability from top-level specifications to test evidence.

5. Documentation of Completed Exercises

Each verification and validation activity will be documented, including:

1. Reviewer names and outcomes of reviews or tests.
2. Test procedures and measured results.
3. requirements and test evidence in the document.
4. Results of the tests

We measured the length of the arm fully extended to see how long our extension needs to be

Once the extension was modeled and printed, we put them on the robot arm and measured the reach to ensure it was within 50cm envelope requirement as shown in Figure 33 & 34.

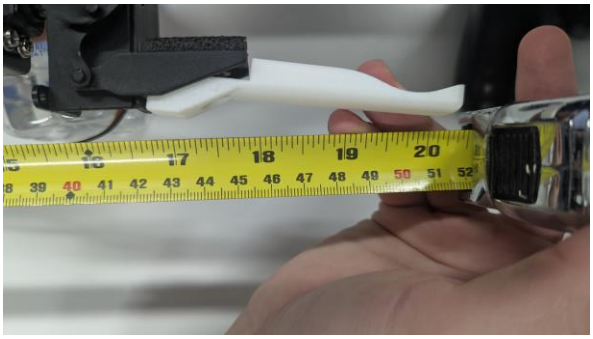

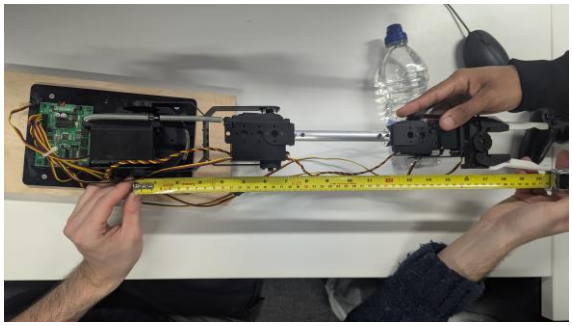

(Figure 33 & 34: V&V Measurements Taken for Length Requirement)

Iterative verification of the mechanical extension was conducted through successive CAD revisions and simulation refinement. The extension geometry was modeled and adapted to improve functional performance, demonstrating iterative design development. The refined model was subsequently analyzed using finite element analysis, with mesh density adjusted to improve result accuracy. Stress and deformation outputs confirmed that the design operated within acceptable limits under expected loading conditions.

Verification of system architecture was supported through both high-level and low-level design reviews. High-level design confirmed correct subsystem allocation and interface definition, while low-level design verified consistency across mechanical, electrical, and software implementations. Responsibility for subsystem-level verification was distributed across the team in line with assigned roles, with all members contributing to overall system integration.

Software verification was carried out through targeted servo testing to confirm correct actuator response, followed by repeated execution of the final control firmware to assess positional accuracy and motion repeatability over time.

System-level validation was completed through physical task demonstrations, during which the robot was taught a pick-and-place routine and subsequently replayed the taught motion. Successful transfer of a test tube between racks under representative operating conditions confirmed that the system met its functional requirements.

6. Summary

The V&V plan has been structured so it can be traced and quality assured.

This is done by completing all tests and documenting each one. This means we can say the arm is not only technically suitable but also physically suitable compared to the consumers' specifications and needs.

Reflection and Evaluation

Project Reflection
"What would we do different if we could do it all over again?"

Arthur H. Hall an American pioneer in Systems Engineering emphasized that the engineer's first task in any design situation is to determine what the real problem is (Hall, 1962). Our project attempted to follow the traditional engineering design process (Fig. 35). However, we fell short on multiple aspects, and the key one was defining the problem.

While a suitable problem was selected from the project brief, it was not until the live stakeholder demonstration that it became evident that, although stakeholder requirements were formally satisfied, they were insufficiently scoped for real world deployment. This limitation highlighted a lack of depth in early stakeholder engagement. In future iterations, structured stakeholder interviews and scenario-based validation should be conducted at earlier stages to reduce the risk of late-stage requirement expansion.

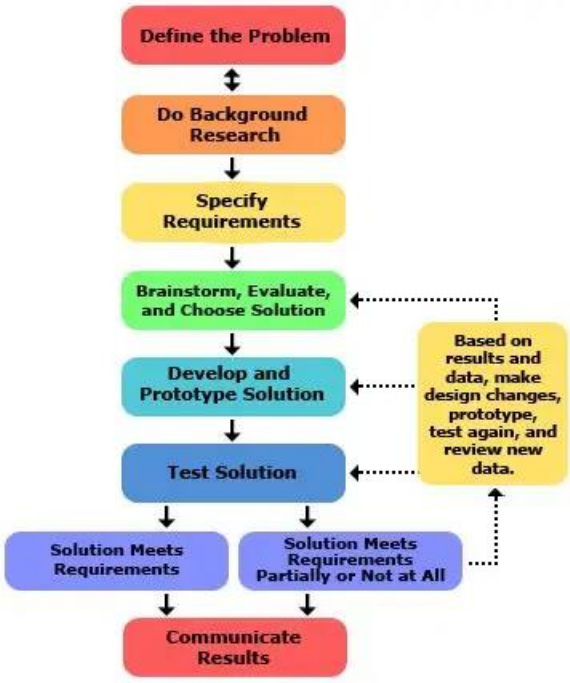

(Figure 35: Engineering Design Process Flow Chart)

A broader emphasis could have also been made regarding the bigger picture of the project, especially for our stakeholders. How they impact global social, economic, technological and environmental development goals that the UN outlines with our pick-n-place robot is critical. The project itself works towards Goal 3, Good Health and Well-Being if applied in the medical sector, however overall, it may have varying impacts on Goal 8, Good Jobs and Economic

Growth (Fig. 36). This is important information that impacts the design process along with the overall project itself.

(Figure 36: UN Global Goals for Sustainable Development)

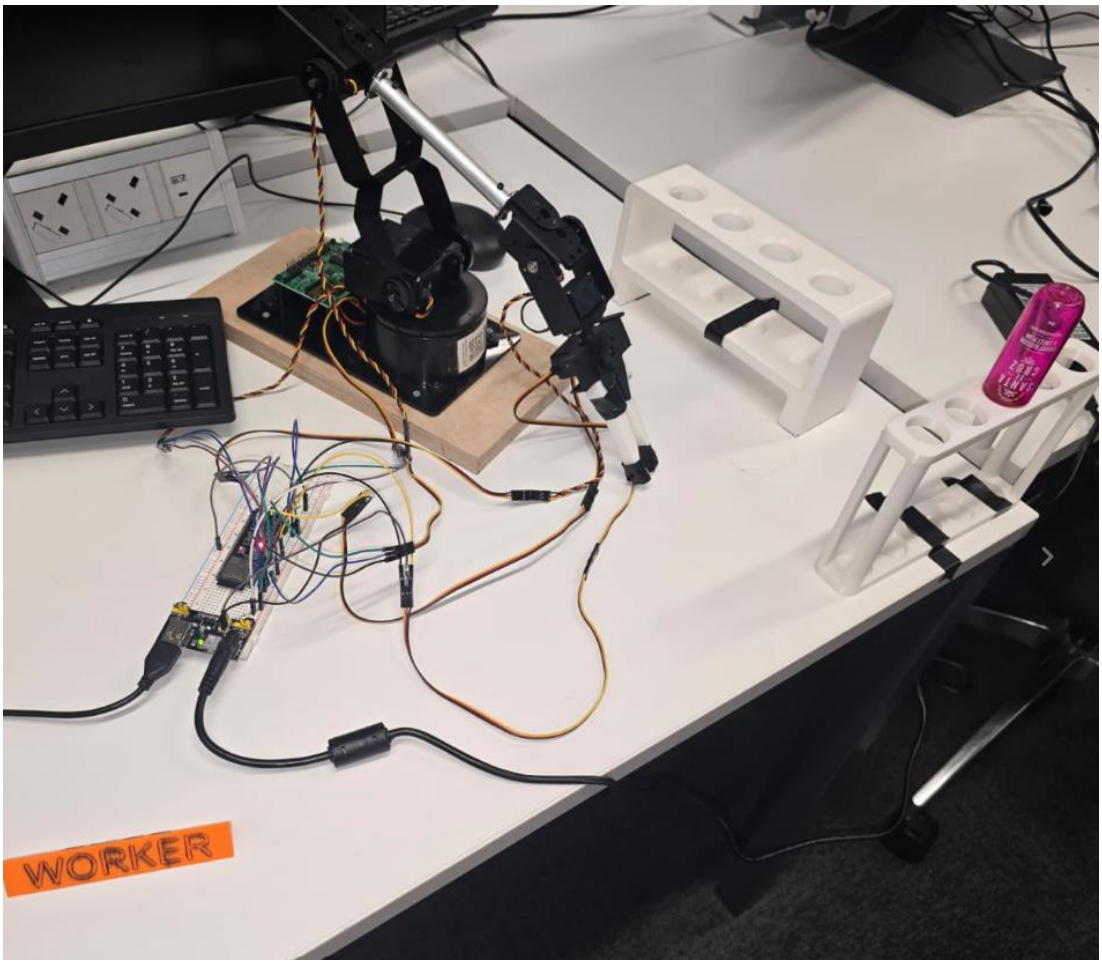

(Figure 37: Completed Robotic Arm System During Stakeholder Demo)

Overall Evaluation
"What did we get right?"

The project successfully delivered a functional robotic system capable of repeatedly transferring test tubes between fixed racks within the specified area. The system met its core functional and safety requirements, as demonstrated through structured verification and validation activities, including servo checks, repeatability testing, and controlled demonstrations. Key objectives relating to safe operation, teachability, and mechanical robustness were satisfied, indicating that the minimum viable product was appropriate for the defined academic and laboratory context.

From a technical perspective, the project's strongest outcomes were the mechanical design of the custom gripper and the implementation of a deterministic, safety-aware control software. Finite element analysis showed that the gripper operated with an acceptable factor of safety under worst case scenarios, while software safeguards such as timeouts and motion smoothing reduced operational risk. As a result, it demonstrates an effective application of analytical methods, simulation tools, and embedded systems design principles in line with systems engineering best practice.

However, the evaluation also identifies clear limitations. While stakeholder requirements were formally met, they were defined at a level that constrained real world applications. This became apparent during the live stakeholder demonstration, where additional expectations relating to usability, diagnostics, and operational context emerged late in the project lifecycle. As a result, some design decisions were basically reactive rather than proactive, limiting the opportunities for user centered features.

Additionally, the prototype intentionally omitted several hardware safety and usability features, including an industry standard physical emergency stop, electrical protection components. Although these decisions were justified and mitigated through software controls and basic emergency stop hardware, they represent a major gap between the prototype and the deployable system. These limitations were explicitly documented and provided a clear roadmap for future development, including improved power protection, physical safety interlocks, and enhanced user interfaces.

In conclusion, the project can be evaluated as a successful academic engineering outcome that met its defined requirements and demonstrated sound technical judgement, while also revealing the importance of early, in depth stakeholder engagement and requirement scoping. The work provides a solid foundation for further development and reflects a realistic balance between technical ambition, safety, and project constraints such as time and resources.

Strengths	**Weaknesses**
• Requirement driven system design and traceability • Mechanical prototyping supported by FEA • Risk assessment, incident response and safety reviews • V&V through physical testing and demos	• Uneven workload distribution • Delays in maintain documentation alongside ongoing development • Limited early emphasis on UI refinement • Late refinement of stakeholder needs

(Figure 38: Team Project Strengths and Weaknesses Chart)

References Cited

Aldosari, F., Khan, M.A.A., Asad, M. and Djavanroodi, F. (2023) 'Finite element analysis of polylactic acid (PLA) under tensile and compressive loading', *Journal of Physics: Conference Series*, 2468, p. 012094. doi:10.1088/1742-6596/2468/1/012094.

Ansys (2025) *What is finite element analysis (FEA)?* [online]. Available from: https://www.ansys.com [Accessed 1 December 2025].

Eric Nantel (2024) *SES-V1 3D CAD models* [online]. Lynxmotion. Available from: https://www.lynxmotion.com [Accessed 30 November 2025].

HiTec RCD (2025) *HS-422 deluxe resin gear servo* [online]. Available from: https://hitecrcd.com [Accessed 30 October 2025].

Lynxmotion (no date) *About Lynxmotion* [online]. Available from: https://www.lynxmotion.com [Accessed 1 December 2025].

MakeItFrom.com (2025) *Polylactic acid (PLA, polylactide): material properties* [online]. Available from: https://www.makeitfrom.com/material-properties/Polylactic-Acid-PLA-Polylactide [Accessed 5 November 2025].

RobotShop (2025) *Lynxmotion SES-V1 AL5D PLTW robotic arm (5-DOF) assembled* [online]. Available from: https://www.robotshop.com [Accessed 30 November 2025].

Shady Farah, D., Anderson, D.G. and Langer, R. (2016) 'Physical and mechanical properties of PLA and their functions in widespread applications: a comprehensive review', *Elsevier* [online]. Available from: https://www.sciencedirect.com [Accessed 29 October 2025].

The Management of Health and Safety at Work Regulations 1999 (SI 1999/3242) (1999) [online]. Available from: https://www.legislation.gov.uk/uksi/1999/3242/regulation/3 [Accessed 5 November 2025].

University of the West of England (2024) *Risk management policy and procedure*. Bristol: UWE Bristol. Available from: https://www.uwe.ac.uk/about/structure-and-governance/policies [Accessed 5 November 2025].

Additional Links

Additional Links to Other Group 5I Documents

Meeting Minutes - Group 5I.docx

Risk Assessment - Group5I.docx

GanttChart-Group5I.xlsx

Bibliography

Resources not cited but critical for reference

'Control of Substances Hazardous to Health (COSHH) - HSE' (2023) *Hse.gov.uk*. 2023 [online]. Available from: https://www.hse.gov.uk/coshh/?utm_source=hse.gov.uk&utm_medium=referral&utm_campaign=guidance-push&utm_term=coshh&utm_content=home-page-info.

'Directive - 98/24 - EN - EUR-Lex' (2024) *Europa.eu*. 2024 [online]. Available from: https://eur-lex.europa.eu/legal-content/EN/TXT/?uri=CELEX%3A31998L0024&qid=1762185272422 [Accessed 5 January 2026].

Occupational Safety and Health Administration (2012) *1910.1200 - Hazard Communication. | Occupational Safety and Health Administration Osha.gov*. 2012 [online]. Available from: https://www.osha.gov/laws-regs/regulations/standardnumber/1910/1910.1200.

ISO (2010) *ISO 12100:2010 ISO*. November 2010 [online]. Available from: https://www.iso.org/standard/51528.html.

HSE (2013) *Control of substances hazardous to health (Sixth edition) - L5 Hse.gov.uk*. 2013 [online]. Available from: https://www.hse.gov.uk/pubns/books/l5.htm.

'Working with substances hazardous to health: A brief guide to COSHH - HSE' (2025) *Hse.gov.uk*. 2025 [online]. Available from: https://www.hse.gov.uk/pubns/indg136.html [Accessed 6 January 2026].

'EUR-Lex - 01998L0024-20240408 - EN - EUR-Lex' (2024) *Europa.eu*. 2024 [online]. Available from: https://eur-lex.europa.eu/eli/dir/1998/24/2024-04-08/ [Accessed 6 January 2026].

'Exposure to chemical agents | EUR-Lex' (2019) *Europa.eu*. 26 July 2019 [online]. Available from: https://eur-lex.europa.eu/EN/legal-content/summary/exposure-to-chemical-agents.html [Accessed 6 January 2026].

Occupational Safety and Health Administration (2012) *1910.1200 - Hazard Communication. | Occupational Safety and Health Administration Osha.gov*. 2012 [online]. Available from: https://www.osha.gov/laws-regs/regulations/standardnumber/1910/1910.1200.

'Federal Register :: Request Access' (no date) *unblock.federalregister.gov* [online]. Available from: https://www.ecfr.gov/current/title-29/subtitle-B/chapter-XVII/part-1910/subpart-Z/section-1910.1200.

Health Canada (2015) *Workplace Hazardous Materials Information System (WHMIS) - Canada.ca Canada.ca*. 2015 [online]. Available from: https://www.canada.ca/en/health-

canada/services/environmental-workplace-health/occupational-health-safety/workplace-hazardous-materials-information-system.html.

'WHMIS.org | Canada's National WHMIS Portal' (no date) *whmis.org* [online]. Available from: https://whmis.org/.

Safe Work Australia (no date) *Model WHS laws Safe Work Australia* [online]. Available from: https://www.safeworkaustralia.gov.au/law-and-regulation/model-whs-laws.

Safe Work Australia (2022) *Legislation | Safe Work Australia www.safeworkaustralia.gov.au*. 2022 [online]. Available from: https://www.safeworkaustralia.gov.au/law-and-regulation/legislation.

'Health and Safety at Work Act 2015 No 70 (as at 01 December 2020), Public Act – New Zealand Legislation' (2015) *www.legislation.govt.nz*. 4 September 2015 [online]. Available from: https://www.legislation.govt.nz/act/public/2015/0070/latest/whole.html.

WorkSafe New Zealand (2017) *Health and Safety at Work Act 2015 WorkSafe*. 4 September 2017 [online]. Available from: https://www.worksafe.govt.nz/laws-and-regulations/acts/hswa/.

Singapore Statutes Online (2019) *Workplace Safety and Health Act - Singapore Statutes Online Agc.gov.sg*. 2019 [online]. Available from: https://sso.agc.gov.sg/Act/WSHA2006.

Ministry of Manpower (2018) *Page title Ministry of Manpower Singapore*. 2018 [online]. Available from: https://www.mom.gov.sg/workplace-safety-and-health/workplace-safety-and-health-act.

Nor (2018) *Official Website Department of Occupational Safety and Health - USECHH Regulation Dosh.gov.my*. 2018 [online]. Available from: https://intranet.dosh.gov.my/chemical-management-v/usechh-regulation.

ISO (2019) *ISO 9241-210:2019 ISO*. 2019 [online]. Available from: https://www.iso.org/standard/77520.html.

International Organization for Standardization (2010) *ISO 9241-210:2010 ISO*. 2010 [online]. Available from: https://www.iso.org/standard/52075.html.

Brooke, J. (2013) SUS: A Retrospective. *Journal of usability studies* [online]. 8 (2), pp. 29–40. Available from: https://uxpajournal.org/wp-content/uploads/sites/7/pdf/JUS_Brooke_February_2013.pdf.

'Managing the causes of work-related stress: A step-by-step approach using the Management Standards - HSG218' (2003) *www.hse.gov.uk*. 2003 [online]. Available from: https://www.hse.gov.uk/pubns/books/clinical-laboratories.htm.

'Biosafety Resources' (2019) *Hse.gov.uk*. 2019 [online]. Available from: https://www.hse.gov.uk/biosafety/information.htm.

ISO (2010) *ISO 12100:2010 ISO*. November 2010 [online]. Available from: https://www.iso.org/standard/51528.html.

Health and Safety Executive (2019) *Risk assessment: Template and examples - HSE Health and Safety Executive*. 2019 [online]. Available from: https://www.hse.gov.uk/simple-health-safety/risk/risk-assessment-template-and-examples.htm.

International Organization for Standardization (2022) *ISO 15189:2022 ISO*. December 2022 [online]. Available from: https://www.iso.org/standard/76677.html.

'Testing of chemicals' (no date) *OECD* [online]. Available from: https://www.oecd.org/en/topics/testing-of-chemicals.html.

'Federal Register :: Request Access' (1997) *unblock.federalregister.gov*. 20 March 1997 [online]. Available from: https://www.ecfr.gov/current/title-21/chapter-I/subchapter-A/part-11.

'EUR-Lex - 32011L0065 - EN - EUR-Lex' (no date) *eur-lex.europa.eu* [online]. Available from: https://eur-lex.europa.eu/eli/dir/2011/65/oj/eng.

European Commission (2024) *RoHS Directive environment.ec.europa.eu*. 2024 [online]. Available from: https://environment.ec.europa.eu/topics/waste-and-recycling/rohs-directive_en.

European Chemicals Agency (2018) *Understanding REACH - ECHA Echa*. 2018 [online]. Available from: https://echa.europa.eu/regulations/reach/understanding-reach.

European Commission (2025) *REACH Regulation environment.ec.europa.eu*. 2025 [online]. Available from: https://environment.ec.europa.eu/topics/chemicals/reach-regulation_en.

International Organization for Standardization (2015) *ISO 9001:2015 quality management systems — requirements ISO*. 2015 [online]. Available from: https://www.iso.org/standard/62085.html.

Kelechava, B. (2024) *Acceptability of Electronic Assemblies (IPC A-610J-2024) - ANSI Blog The ANSI Blog*. 2 July 2024 [online]. Available from: https://blog.ansi.org/ansi/acceptability-electronic-assemblies-ipc-a-610j-2024/.

IPC-A-610G. (no date) [online]. Available from: https://www.electronics.org/TOC/IPC-A-610G.pdf.